Quantum Information Processing (2025) 24:195
https://doi.org/10.1007/s11128-025-04819-1

Quantum color image edge detection algorithm based on Sobel operator

Suzhen Yuan[1,2,3] · Xianli Li[1] · Shuyin Xia[3,4] · Xianrong Qing[1] · Jermiah D. Deng[2]

Received: 11 October 2024 / Accepted: 12 June 2025 / Published online: 24 June 2025
© The Author(s), under exclusive licence to Springer Science+Business Media, LLC, part of Springer Nature 2025

Abstract
Edge detection is a preprocessing step in image processing that directly affects the effectiveness of subsequent image processing. However, real-time image preprocessing is challenging to achieve with the increased number and quality of images. Therefore, this paper studies a quantum color image spatial edge detection algorithm and uses the International Business Machines Quantum (IBM Q) quantum simulation platform to simulate and verify the designed quantum circuit. First, the quantum adder, quantum subtractor, quantum maximum value calculation module, and quantum threshold operation module are optimized. Then, based on these modules, a new quantum edge detection algorithm is designed. Finally, the analysis shows that compared with existing related work, the algorithm in this paper has lower circuit complexity and fewer qubits, reducing the circuit complexity from $O(n^2 + q^3)$ to $O(q)$. Finally, the proposed algorithm is simulated on the IBM Q quantum simulator, which can effectively detect the edge information of quantum color images.

Keywords Quantum color image processing · Image edge detection algorithm · Quantum image simulation

1 Introduction

Digital image processing is a process of processing, analyzing, and changing digital images using computer technology. With the sharp increase in image data volume, the real-time problem of image processing algorithms has become a limitation of the current technical level. Since state-of-the-art algorithms often have overwhelming computational complexity, finding better ways to store and process digital images with high precision and high real-time performance is necessary. Quantum image processing has essential advantages such as parallelism and superposition and can perform more calculations simultaneously, effectively solving the above problems.

Extended author information available on the last page of the article

Before processing quantum images, the first step is to consider how to store classical image data in a quantum computer. Therefore, the primary task of quantum image processing is storing quantum images. In 2003, Venegas-Andraca first proposed the image representation model of Qubit Lattice [1]. On this basis, subsequent researchers proposed flexible representation of quantum images (FQRI) [2], the novel enhanced quantum representation (NEQR) [3], the generalized quantum image representation (GQIR) [4], the novel quantum representation of color digital images (NCQI) [5], an optimized quantum representation for color digital images (OCQR) [6]. FRQI stores the grayscale information of an image in the probability amplitude of a single qubit, which has fewer parameters for manipulation in the design of image processing algorithms, making it unsuitable for designing complex image processing algorithms. NEQR stores grayscale information in the ground states of multiple qubits but cannot store quantum color images. Although NCQI can represent color images, it uses many multi-qubit control gates, leading to high complexity in image preparation. OCQR is a further optimization of NCQI, which can store color images on quantum circuits with relatively fewer qubits. Therefore, this paper adopts the OCQR model to represent quantum color imagery.

Based on these quantum image representation models, various quantum image processing algorithms have been proposed, such as image segmentation [7–9], image filtering [10–13], image scrambling [14, 15], image geometric transformation [16–18], image encryption [19, 20], and image edge detection [21–35]. Regarding the quantum image edge detection algorithm based on the Sobel operator, Zhang et al. proposed QSobel based on the FRQI representation model [21]. Fan et al. proposed a quantum edge detection scheme based on the NEQR model [24]. Zhou et al. proposed a quantum image edge detection algorithm using Sobel operators in four directions based on the GQIR representation model [26]. Chetia optimized Zhou's algorithm based on the NEQR representation model [27]. Ma et al. subsequently proposed a NEQR quantum image edge detection algorithm based on the eight-directional Sobel operator [30], and Liu et al. improved the algorithm proposed by Ma et al. [31]. However, these edge detection algorithms based on the Sobel operator only work on grayscale images and cannot be applied to color images. Among them, reference [27], reference [30], and reference [31] achieve the functional implementation of edge detection. Still, they do not complete the overall circuit design for edge detection, so they require multiple measurements and extra qubits to complete the design. More importantly, these methods suffer from a vast circuit complexity burden and require many auxiliary qubits. Therefore, this paper proposes a Sobel operator-based edge detection algorithm for quantum color images, which overcomes these problems.

Based on the OCQR model, this paper proposes an edge detection algorithm suitable for quantum color images. The contributions of this paper are as follows:

(1) An efficient row-by-row image preparation method is used to prepare color images.
(2) Basic operational modules such as quantum adders, quantum comparators, and quantum subtractors with lower circuit complexity are adopted to construct the edge detection algorithm.

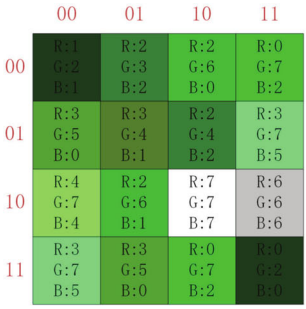

$$
\begin{aligned}
|I\rangle = \frac{1}{8}\Big(&(|001\rangle\otimes|00\rangle+|010\rangle\otimes|01\rangle+|001\rangle\otimes|10\rangle)\otimes|0000\rangle+(|010\rangle\otimes|00\rangle+|011\rangle\otimes|01\rangle+|010\rangle\otimes|10\rangle)\otimes|0001\rangle\\
&+\Big(\underbrace{|010\rangle}_{\text{Intensity}}\otimes\underbrace{|00\rangle}_{\text{Color channel}}+|110\rangle\otimes|01\rangle+|000\rangle\otimes|10\rangle\Big)\otimes\underbrace{|0010\rangle}_{\text{Location information}}+(|000\rangle\otimes|00\rangle+|111\rangle\otimes|01\rangle+|010\rangle\otimes|10\rangle)\otimes|0011\rangle\\
&+(|011\rangle\otimes|00\rangle+|101\rangle\otimes|01\rangle+|000\rangle\otimes|10\rangle)\otimes|0100\rangle+(|011\rangle\otimes|01\rangle+|100\rangle\otimes|01\rangle+|001\rangle\otimes|10\rangle)\otimes|0101\rangle\\
&+(|010\rangle\otimes|00\rangle+|100\rangle\otimes|01\rangle+|010\rangle\otimes|10\rangle)\otimes|0110\rangle+(|011\rangle\otimes|00\rangle+|111\rangle\otimes|01\rangle+|101\rangle\otimes|10\rangle)\otimes|0111\rangle\\
&+(|100\rangle\otimes|00\rangle+|111\rangle\otimes|01\rangle+|100\rangle\otimes|10\rangle)\otimes|1000\rangle+(|010\rangle\otimes|00\rangle+|110\rangle\otimes|01\rangle+|001\rangle\otimes|10\rangle)\otimes|1001\rangle\\
&+(|111\rangle\otimes|00\rangle+|111\rangle\otimes|01\rangle+|111\rangle\otimes|10\rangle)\otimes|1010\rangle+(|110\rangle\otimes|00\rangle+|110\rangle\otimes|01\rangle+|110\rangle\otimes|10\rangle)\otimes|1011\rangle\\
&+(|011\rangle\otimes|00\rangle+|111\rangle\otimes|01\rangle+|101\rangle\otimes|10\rangle)\otimes|1100\rangle+(|011\rangle\otimes|00\rangle+|101\rangle\otimes|01\rangle+|000\rangle\otimes|10\rangle)\otimes|1101\rangle\\
&+(|000\rangle\otimes|00\rangle+|111\rangle\otimes|10\rangle+|010\rangle\otimes|10\rangle)\otimes|1101\rangle+(|000\rangle\otimes|00\rangle+|010\rangle\otimes|10\rangle+|000\rangle\otimes|10\rangle)\otimes|1111\rangle\Big)
\end{aligned}
$$

Fig. 1 A 4×4 color image represented with the OCQR model

(3) The algorithm's feasibility is verified through simulations on the IBM Quantum Experience (IBM Q) platform. Compared with other quantum edge detection algorithms, this algorithm has a lower circuit complexity and requires fewer ancillary qubits.

The remainder of this paper is organized as follows: Section 2 discusses storing a color image based on the OCQR model, and Sect. 3 builds the quantum edge detection circuit for color images. Section 4 performs the simulation experiment on the IBM Q platform, and finally, Sect. 5 concludes this work.

2 The storage of quantum color image

In this paper, the OCQR model was chosen to represent the color image. This model can conveniently handle the intensity information of each color channel and accurately recover the quantum image from the classical image through a finite number of quantum measurements. For a color image with intensity range of $[0, 2^q - 1]$ and a size of d$2^n \times 2^n$, the OCQR model can be represented as [6]:

$$|I\rangle = \frac{1}{\sqrt{2^{2n+1}}} \sum_{\lambda=0}^{3} \sum_{Y=0}^{2^n-1} \sum_{X=0}^{2^n-1} \otimes_{i=0}^{q-1} |C_{YX}^{i}\rangle |\lambda\rangle |YX\rangle \tag{1}$$

where λ represents the color channel information, $\lambda \in \{00, 01, 10, 11\}$, $|00\rangle$ represents the 'R' color channel, $|01\rangle$ represents the 'G' channel, $|10\rangle$ represents the 'B' color channel, and $|11\rangle$ is the redundant qubits; n qubits represent the position information along the X-axis, and another n qubits represent the position information along the Y-axis, where $C_{YX}^{i} \in 0, 1, i = 0, 1, \ldots, q-1$, which encodes the intensity information of the corresponding color channel for the image. Figure 1 illustrates an example of a 4×4 color image, where every (R, G, B) channel ranges in [0, 7] utilizing the OCQR model.

As edge detection requires neighboring pixels to perform computations, we need to obtain the eight-neighborhood image of Fig. 1, as shown in Fig. 2. In this paper, we use the row-by-row image preparation method proposed in our previous work [13],

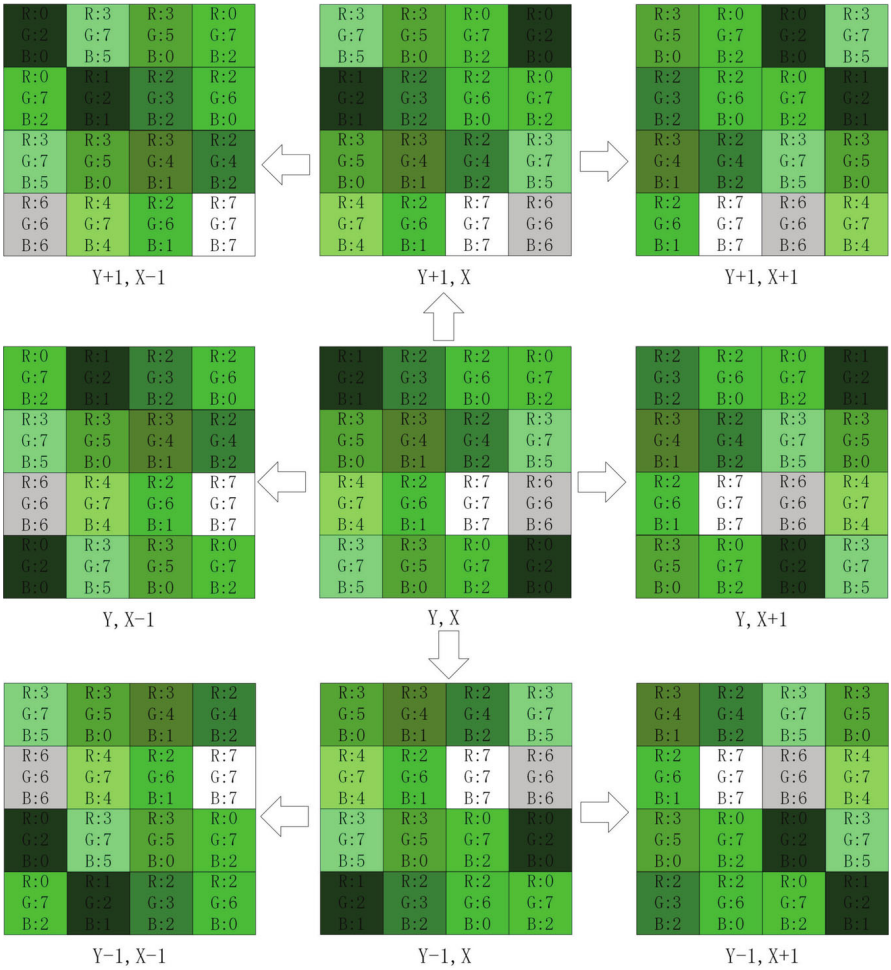

Fig. 2 A 4 × 4 color image and its eight neighborhood images

which can prepare nine images simultaneously with the lowest complexity. Figure 3 shows the preparation process of a pixel at position '0000' in Fig. 1, and Fig. 4 is the quantum circuit diagram of the nine quantum color images corresponding to the position information '0000' and color channel 'R' in Fig. 2. For detailed preparation procedures, please refer to reference [13].

3 Edge detection algorithm of quantum color image

This section presents a quantum edge detection algorithm based on the Sobel operator for color images. Firstly, several necessary quantum image processing modules are introduced, such as the quantum cloning module, the quantum adder module [9], the

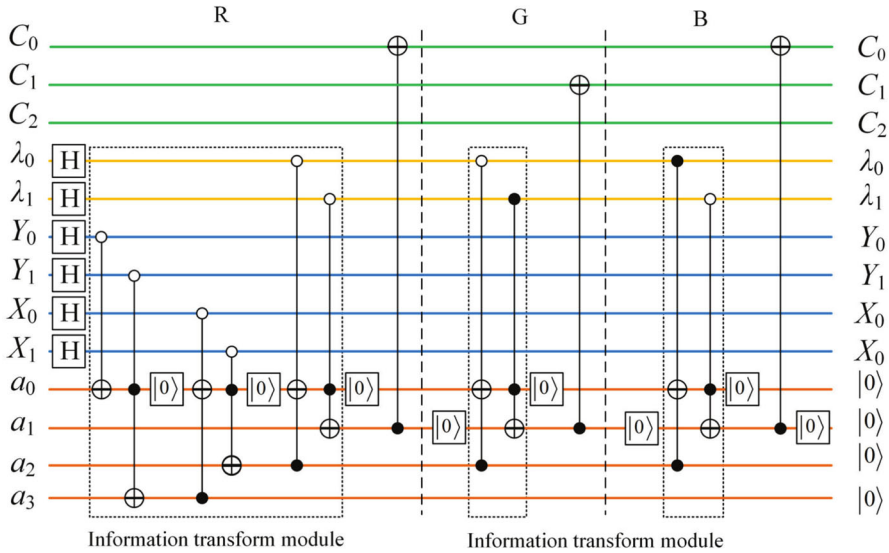

Fig. 3 Pixel preparation of the '0000' position in Fig. 1

quantum subtractor module [36], the quantum comparator module, and so on. Then, these modules are adopted to design the quantum circuit of the overall algorithm.

3.1 Necessary quantum image processing modules

In this subsection, several necessary quantum image processing modules are introduced.

3.1.1 Quantum cloning module

Equation 2 defines the quantum cloning module, which is composed of multiple CNOT gates and can copy the information of a qubit sequence $|C_{YX}\rangle = \left|C_{YX}^{n-1}\cdots C_{YX}^{0}\right\rangle$ to another qubit sequence $|0\rangle^{\otimes n}$. The quantum circuit of the quantum cloning operation module is shown in Fig. 5.

$$U_c\left(|C\rangle\,|0\rangle^{\otimes n}\right) = |C\rangle\,|C\rangle \tag{2}$$

3.1.2 Quantum adder module

According to [9], given a composite system composed of two n-qubit quantum states $|C_{YX}\rangle$ and $|C_{Y'X'}\rangle$ as addend and augend, the purpose of the quantum adder is to recursively calculate each pair of $|C_{YX}^{i}\rangle$ and $|C_{Y'X'}^{i}\rangle$ in the two quantum states $|C_{YX}\rangle = |C_{YX}^{n-1}C_{YX}^{n-2}\cdots C_{YX}^{0}\rangle$ and $|C_{Y'X'}\rangle = |C_{Y'X'}^{n-1}C_{Y'X'}^{n-2}\cdots C_{Y'X'}^{0}\rangle$. The overall quantum

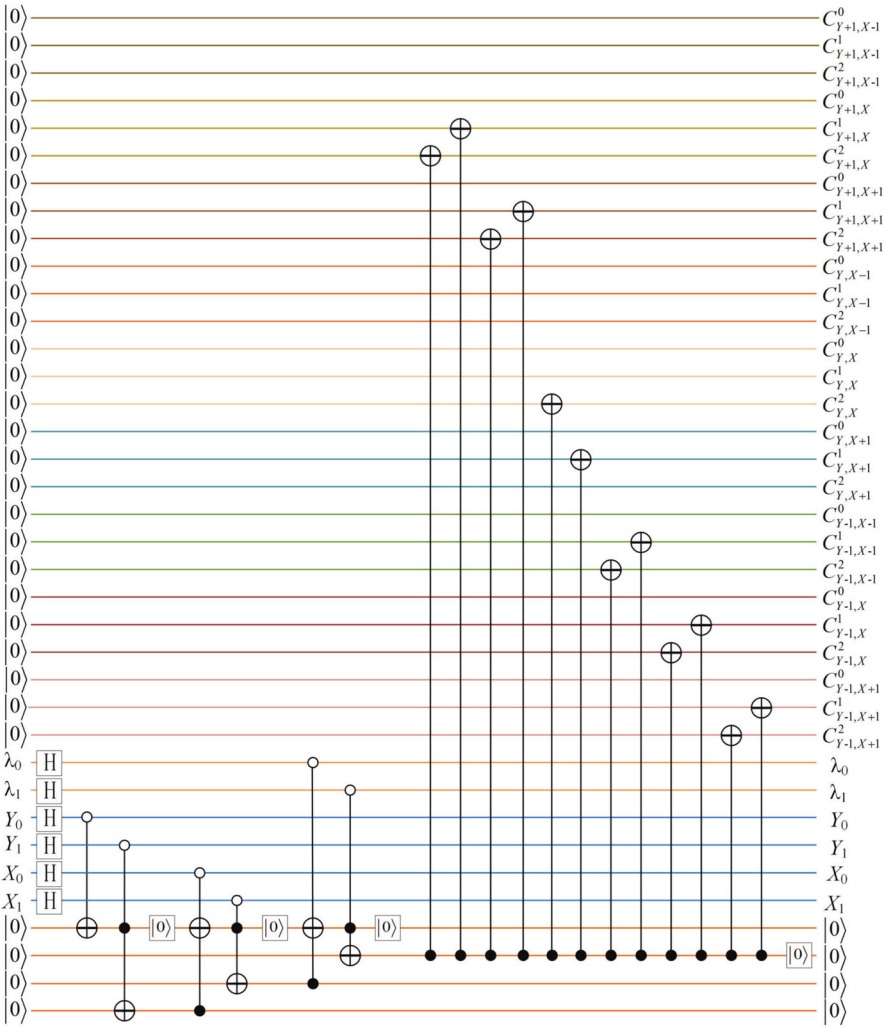

Fig. 4 Preparation of nine quantum color images corresponding to position information "0000" and color channel 'R' in Fig. 2

circuit diagram is shown in Fig. 6, where $|C_{YX}\rangle = |C^{n-1}_{YX} C^{n-2}_{YX} \cdots C^0_{YX}\rangle$ and $|C_{Y'X'}\rangle = |C^{n-1}_{Y'X'} C^{n-2}_{Y'X'} \cdots C^0_{Y'X'}\rangle$ represent two addends, $|a_0\rangle$ and $|a_1\rangle$ are two auxiliary qubits with an initial value of $|0\rangle$ used as carry bits throughout the adder. $|s\rangle$=$|s_0 s_n \ldots s_1\rangle$ represents the result obtained after addition. The output of the quantum adder is $|s\rangle \otimes |b\rangle = |C_{YX} + C_{Y'X'}\rangle \otimes |C_{Y'X'}\rangle$, and the corresponding unitary evolution is shown in Equation 3.

$$U_{add} \left|C^{n-1}_{YX} \cdots C^0_{YX}\right\rangle \otimes \left|C^{n-1}_{Y'X'} \cdots C^0_{Y'X'}\right\rangle = |s_0 s_n \ldots s_1\rangle \otimes \left|C^{n-1}_{Y'X'} \cdots C^0_{Y'X'}\right\rangle \quad (3)$$

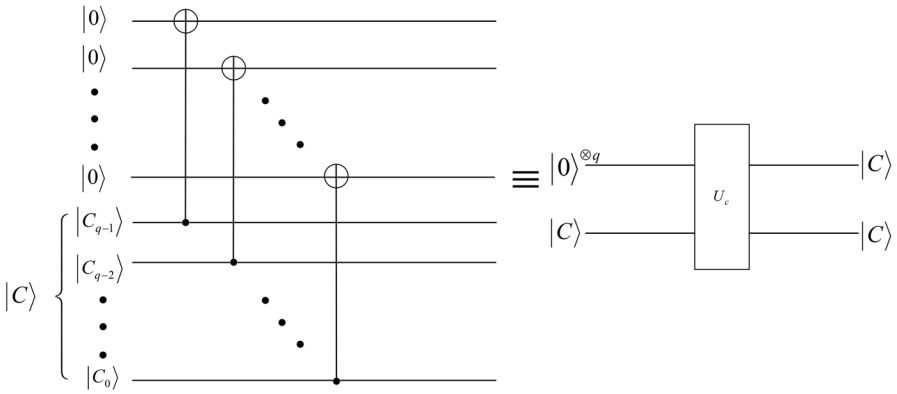

Fig. 5 Quantum circuit and simplified diagram of quantum replication module

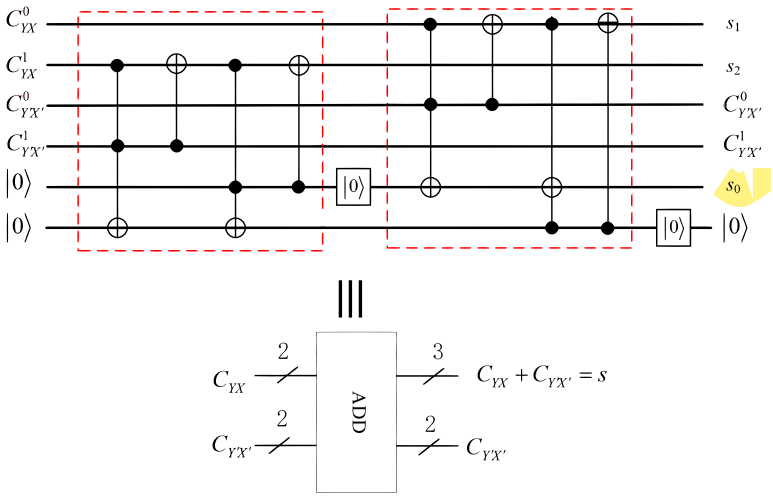

Fig. 6 Quantum circuit and simplified diagram of two-digit quantum adder

3.1.3 Quantum subtractor module

According to reference [36], given a composite system consisting of two n-qubit quantum states $|C_{YX}\rangle|C_{Y'X'}\rangle$ as input, the purpose of the quantum subtractor is to recursively compute each pair of $|C^i_{YX}\rangle$ and $|C^i_{Y'X'}\rangle$ from the two quantum states $|C_{YX}\rangle = |C^{n-1}_{YX}C^{n-2}_{YX}\cdots C^0_{YX}\rangle$ and $|C_{Y'X'}\rangle = |C^{n-1}_{Y'X'}C^{n-2}_{Y'X'}\cdots C^0_{Y'X'}\rangle$. The overall quantum circuit is shown in Fig. 7, similar to the quantum adder described above, where $|C_{YX}\rangle = |C^{n-1}_{YX}C^{n-2}_{YX}\cdots C^0_{YX}\rangle$ represents the minuend, $|C_{Y'X'}\rangle = |C^{n-1}_{Y'X'}C^{n-2}_{Y'X'}\cdots C^0_{Y'X'}\rangle$ represents the subtrahend, $|s\rangle$=$|s_0 s_n \ldots s_1\rangle$ represents the subtracted result, $|a_0\rangle$ and $|a_1\rangle$ are two auxiliary qubits initialized to $|0\rangle$, and are alternately set to $|0\rangle$ throughout the subtractor circuit as borrow bits. The output of the quantum subtractor is $|s\rangle = |C_{YX} - C_{Y'X'}\rangle \otimes |C_{Y'X'}\rangle$, and the corresponding unitary evolution

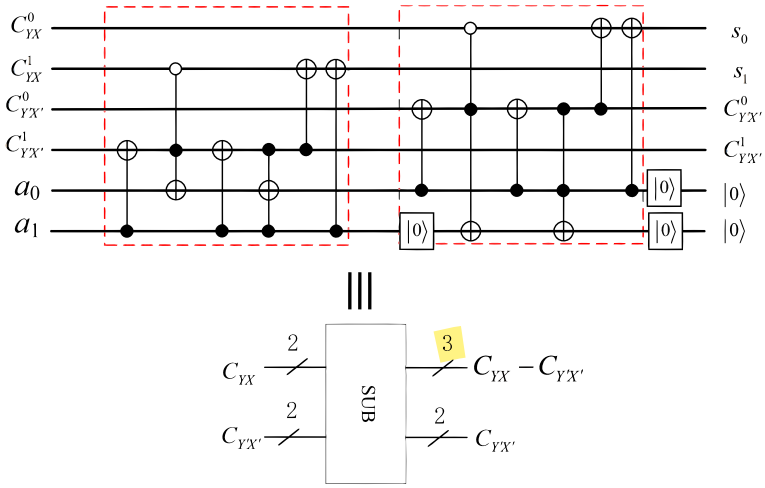

Fig. 7 Quantum circuit and simplified diagram of two-digit quantum subtractor

is shown in Equation 4.

$$U_{sub}\left|C^{n-1}_{YX}\cdots C^{0}_{YX}\right\rangle \otimes \left|C^{n-1}_{Y'X'}\cdots C^{0}_{Y'X'}\right\rangle = |s_{n-1}\ldots s_0\rangle \otimes \left|C^{n-1}_{Y'X'}\cdots C^{0}_{Y'X'}\right\rangle \quad (4)$$

3.1.4 Quantum comparator module

Since this paper needs to calculate the maximum value of $|G_x\rangle$, $|G_y\rangle$, $|G_{45}\rangle$ and $|G_{135}\rangle$, the relationship between them needs to be compared. This paper adopts the quantum comparator proposed in reference [37]. Although this method can only distinguish between two states, its overall quantum circuit complexity is relatively low, which is advantageous for reducing the overall design complexity. For example, the input consists of two-qubit sequences denoted as $|C_{YX}\rangle = |C^{n-1}_{YX}C^{n-2}_{YX}\cdots C^{0}_{YX}\rangle$ and $|C_{Y'X'}\rangle = |C^{n-1}_{Y'X'}C^{n-2}_{Y'X'}\cdots C^{0}_{Y'X'}\rangle$, respectively. When $|C_{YX}\rangle < |C_{Y'X'}\rangle$, $|C_{out}\rangle = |1\rangle$. When $|C_{YX}\rangle \geq |C_{Y'X'}\rangle$, $|C_{out}\rangle = |0\rangle$. The overall quantum circuit is shown in Fig. 8.

3.1.5 Quantum swap module

The quantum swap module is composed of several quantum-controlled gates, and its purpose is to use the result of the quantum comparator as the control bit to ensure that the larger value is in the first qubits, as shown in Fig. 9. For example, given a two n-bit composite system $|C_{YX}\rangle|C_{Y'X'}\rangle$, where $|C_{YX}\rangle = |C^{n-1}_{YX}C^{n-2}_{YX}\cdots C^{0}_{YX}\rangle$ and $|C_{Y'X'}\rangle = |C^{n-1}_{Y'X'}C^{n-2}_{Y'X'}\cdots C^{0}_{Y'X'}\rangle$. When $C_{out} = 1$, the state $|C_{YX}\rangle|C_{Y'X'}\rangle$ is transformed into $|C_{Y'X'}\rangle|C_{YX}\rangle$ after passing through the quantum swap module. When $C_{out} = 0$, no transformation occurs.

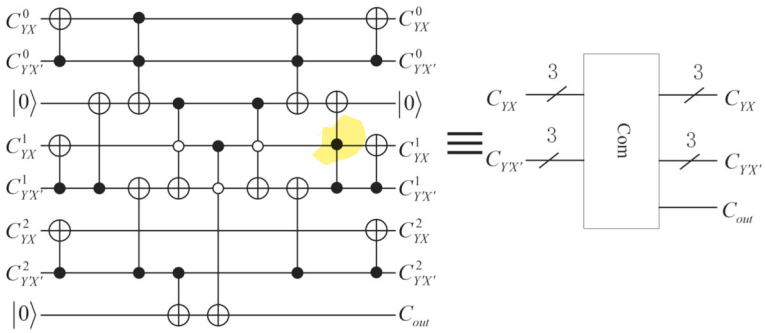

Fig. 8 Quantum circuit and simplified diagram of three-digit quantum comparator

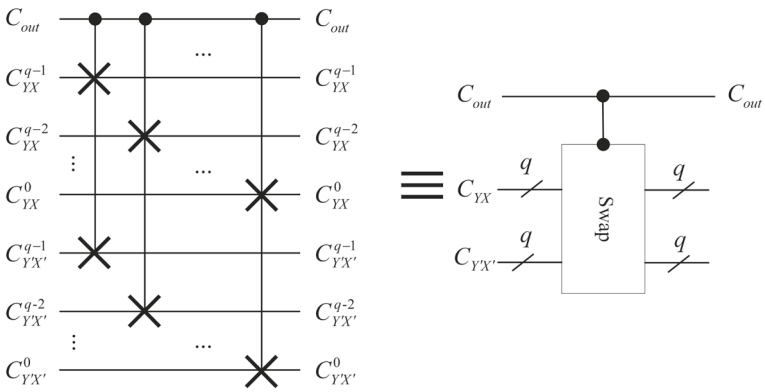

Fig. 9 Quantum circuit and simplified diagram of quantum-controlled swap module

3.1.6 Maximum value calculation module

This paper will involve finding the maximum value from four numbers. Thus, the maximum value calculation module consists of three comparison modules and three controlled switch modules, as shown in Fig. 10. The input numbers are $|G_1\rangle$, $|G_2\rangle$, $|G_3\rangle$, and $|G_4\rangle$; the maximum value calculation module outputs is the maximum value $|G_{max}\rangle$.

3.1.7 Quantum threshold module

The design of the quantum threshold module is as follows: Assume that the range of pixel values is $[0, 2^q - 1]$, and the threshold is 2^{q-1}. As shown in Fig. 11, from top to bottom, the first q qubits encode the value $2^q - 1$, the second q qubits encode G_{max}, which is the maximum value obtained from the previous stage, and the last $q - 1$ qubits encode the threshold 2^{q-1}. G_{max} will be compared with 2^{q-1}, when G_{max} is larger, it is set to $2^q - 1$, otherwise, it is set to zero. The purpose of this module is to obtain the edge pixels.

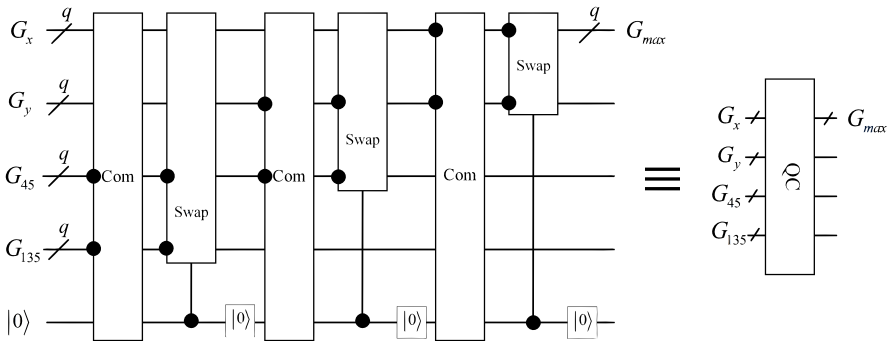

Fig. 10 Quantum circuit and simplified diagram of maximum value calculation module

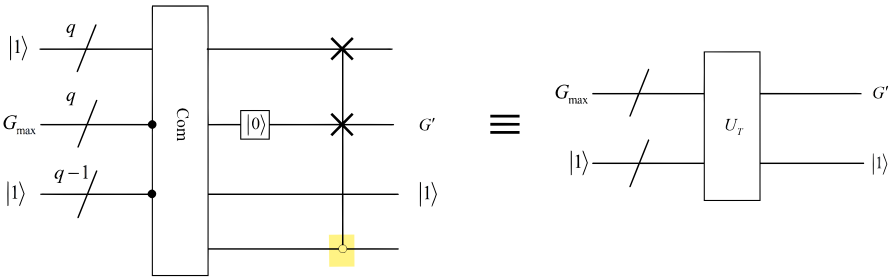

Fig. 11 Quantum circuit and simplified diagram of quantum threshold module

3.2 Quantum edge detection algorithm for color images

Edge detection is detecting the edges of the image, and the Sobel operator [30] is one of the most widely used algorithms for edge extraction. The filter window is shown in Fig. 12a, which is a 3×3 window and is relevant to the center pixel and its neighborhood pixels. The approximate values of the pixel intensity gradients are calculated using the Sobel operator and the filter window. The classical Sobel operator consists of two masks, as shown in Fig. 12b, c, for calculating the approximate values of the intensity gradient in the horizontal and vertical directions, respectively.

However, the classical Sobel operator can only detect edges in the vertical and horizontal directions, but detecting edges in the diagonal direction is difficult. Thus, this paper improves the Sobel operator by adding two auxiliary positions to enable diagonal edge detection. Figure 12d, e shows the +45°, and +135° masks.

The approximate values of the gradients in four directions can be calculated using the convolution operation in Equation 5 and Equation 6.

$$G_x = \begin{bmatrix} -1 & -2 & -1 \\ 0 & 0 & 0 \\ 1 & 2 & 1 \end{bmatrix} * p, G_y = \begin{bmatrix} -1 & 0 & 1 \\ -2 & 0 & 2 \\ -1 & 0 & 1 \end{bmatrix} * p \tag{5}$$

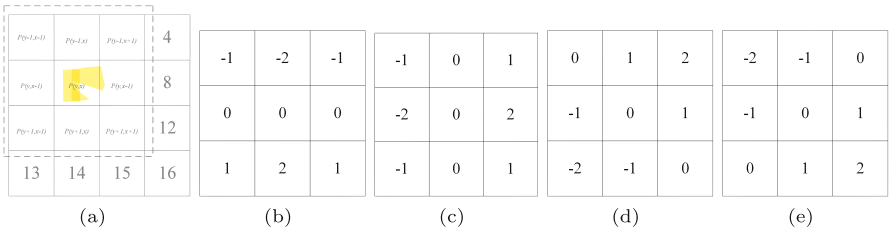

Fig. 12 The filter window and masks of edge detection. **a** A filter window. **b**–**e** are masks of four directions of improved Sobel operator b-e --> horizontal, vertical, diag 45, diag 135

$$G_{45} = \begin{bmatrix} 0 & 1 & 2 \\ -1 & 0 & 1 \\ -2 & -1 & 0 \end{bmatrix} * p, G_{135} = \begin{bmatrix} -2 & -1 & 0 \\ -1 & 0 & 1 \\ 0 & 1 & 2 \end{bmatrix} * p \tag{6}$$

where $*$ is the convolution operation, G_x, G_y, G_{45}, and G_{135} represent the pixel gradient values detected by the vertical, horizontal, $+45°$, and $+135°$ edge detection masks, respectively, and p represents the original image. As for the pixel in position (Y, X), Equation 5 and Equation 6 can be transformed into Equation 7, Equation 8, Equation 9, and Equation 10.

$$\begin{aligned} G_x = {} & p(Y-1, X+1) + 2p(Y, X+1) + p(Y+1, X+1) \\ & -p(Y-1, X-1) - 2p(Y, X-1) - p(Y+1, X-1) \end{aligned} \tag{7}$$

$$\begin{aligned} G_y = {} & -p(Y-1, X-1) - 2p(Y, X-1) - p(Y+1, X-1) \\ & +p(Y-1, X+1) + 2p(Y, X+1) + p(Y+1, X+1) \end{aligned} \tag{8}$$

$$\begin{aligned} G_{45} = {} & -p(Y, X-1) - 2p(Y+1, X-1) - p(Y+1, X) \\ & +p(Y-1, X) + 2p(Y-1, X+1) + p(Y, X-1) \end{aligned} \tag{9}$$

$$\begin{aligned} G_{135} = {} & -p(Y-1, X) - 2p(Y-1, X-1) - p(Y, X-1) \\ & +p(Y+1, X) + 2p(Y+1, X+1) + p(Y+1, X+1) \end{aligned} \tag{10}$$

After calculating the gradients in different directions, the gradient value of each pixel is the maximum absolute value of the four gradient values, as shown in Equation 11.

$$G = \max\left\{|G_x|, \left|G_y\right|, |G_{45}|, |G_{135}|\right\} \tag{11}$$

Based on quantum image processing modules in the previous subsection, the quantum circuit of the edge detection algorithm for color images is designed based on the improved Sobel operator.

Firstly, the quantum circuit to obtain four gradients is designed as shown in Fig. 13. The inputs are the color image and neighborhoods prepared in Section 2, and the outputs are the gradient values in four directions. Due to quantum parallelism, the gradients of other pixels are also calculated when calculating the gradient of one pixel.

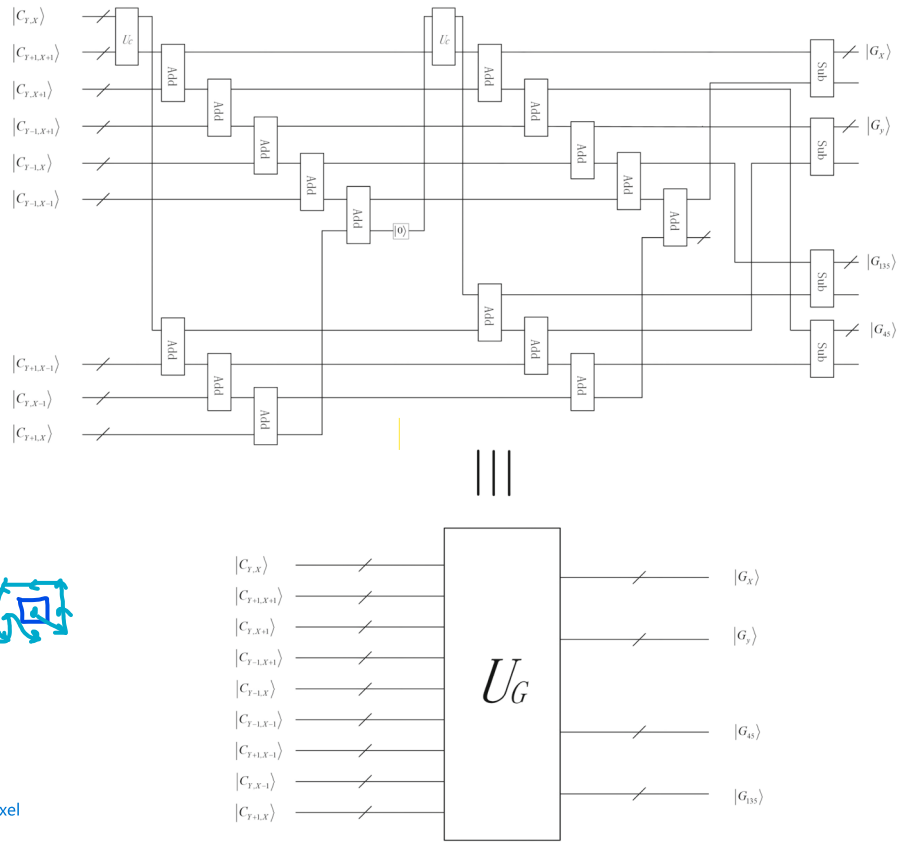

for 1 pixel

Fig. 13 Quantum circuit and simplified diagram of edge gradient calculation

Secondly, the gradient values obtained in each direction are used for bubble sorting to calculate the maximum value G of the four directions. The maximum value can be obtained through the maximum value calculation module as shown in Fig. 10.

Finally, edge pixel information can be obtained by comparing G with the threshold $T = 2^{q-1}$. All pixel gradient values less than T are preserved, and those exceeding T are replaced with T, as shown in Fig. 11. Combining these steps can obtain the quantum circuit for the Sobel operator-based edge gradient calculation. The overall quantum circuit for color image edge detection can be achieved by subtracting the edge gradient from the prepared original image, as shown in Fig. 14.

Figure 14 shows that 19 auxiliary qubits are used. During the image preparation process, four auxiliary qubits are needed. After the image preparation, the auxiliary qubits are set to zero using a reset gate, and these four auxiliary qubits can be repeatedly utilized later. In the subsequent gradient calculation process, eight auxiliary qubits are needed to encode eight quantum ternary adders. Another eight auxiliary qubits are required to encode eight quantum quaternary adders. In the second copy module, an additional auxiliary qubit is necessary to encode the copy bit to replicate the output of

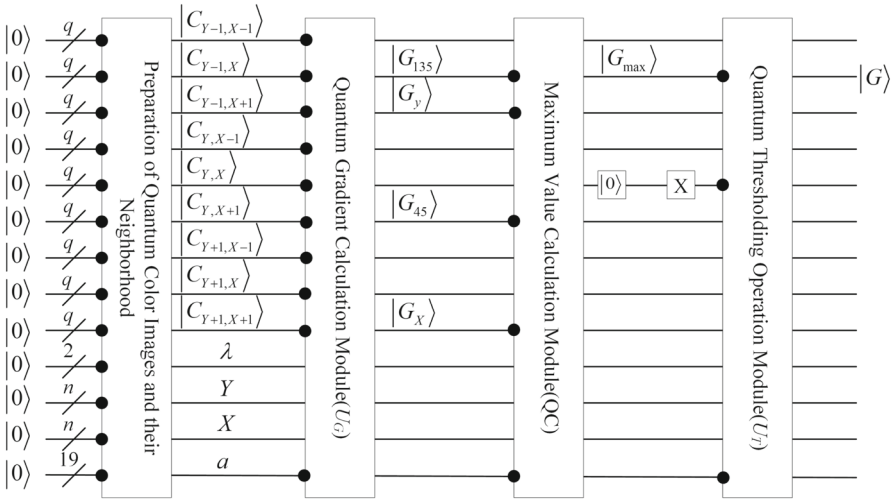

Fig. 14 Quantum circuit of color image edge detection algorithm

a three-qubit adder. In the maximum value calculation module, one auxiliary qubit is needed as the result bit to control the subsequent swap module. Basic quantum operation modules such as quantum adders, quantum subtractors, and quantum comparators still require one auxiliary qubit to complete the operation.

3.3 Circuit complexity analysis

In quantum information processing, the complexity of the circuit depends on the number of quantum gates used. When performing edge detection on a color image of size $2^n \times 2^n$ with an intensity range of $[0, 2^{q-1}]$, the complexity analysis of a series of quantum algorithms used in the quantum circuit shown in Fig. 14 is as follows.

The edge extraction module includes the quantum edge gradient calculation, maximum value calculation, and threshold calculation modules. The edge gradient calculation module uses 16 quantum adders, four quantum subtractors, and two quantum copying modules. According to [36], the complexity of a q-bit quantum adder is $12q$, the complexity of a q-bit quantum subtractor is $14q$, and the complexity of a quantum copying module is q. Therefore, the complexity of the edge gradient calculation module is $(12q \times 16 + 14q \times 4 = 248q)$. The maximum value calculation module includes three comparators and three controlled exchange gates, and its complexity is $(87q - 18)$. The threshold calculation module consists of a comparator, q X gates, and a controlled exchange gate, resulting in a $(14q - 6 + q + 15q = 30q - 6)$ complexity. Therefore, the complexity of this part is $(248q + 87q - 18 + 30q - 6 = 365q - 24)$.

In general, image preparation is not included when calculating the circuit complexity of quantum image processing algorithms. Therefore, this paper compares the edge extraction module with other literature, as shown in Table 1.

From Table 1, it can be seen that when large-sized images are used as input for quantum algorithms, the algorithm designed in this paper has a significant advantage

Table 1 Comparison of the quantum circuit for quantum colored image edge detection with other methods in terms of circuit complexity and other aspects

Method	Circuit complexity	Whether it is a colored image	Simulation
[24]	$O(n^2 + 2^{q+4} + q^2)$	No	No
[26]	$O(n^2 + 2^{q+5} + q^2)$	No	No
[27]	$O(n^2 + q^3)$	No	Yes
Our	$O(q)$	Yes	Yes

in terms of circuit complexity. Additionally, it can process quantum color images, while references [24, 26] and [27] can only process grayscale images. Moreover, this paper presents, for the first time, a simulation of a quantum edge detection algorithm for color images based on the Sobel operator using a quantum simulator. In contrast, references [24, 26] and [27] only performed simple simulations using MATLAB software, which further demonstrates the applicability of the algorithm designed in this paper to quantum color images.

4 The simulation of the proposed algorithm on IBM Q platform

This section simulates the proposed algorithm on the IBM Q platform. IBM has several real quantum devices and simulators available for users through the cloud. These devices are accessible and can be used through Qiskit, an open-source quantum software development kit, and IBM Q Experience, which offers a virtual interface for coding a quantum computer. In addition, researchers can use a local simulator through Qiskit. In the Qiskit framework, the quantum devices, quantum simulator, and local simulator are all called backends. As of May 2022, 5,000 qubits can be achieved through the backend ('Simulator_stabilizer'). The corresponding quantum circuit for median filtering of a quantum color image can be simulated on the IBM Q platform, and the overall quantum circuit can be verified by the output data reflected by the probability histogram of the quantum circuit. For further details on the IBM Q platform, the reader is referred to our previous work [7].

As the IBM Q platform can provide up to 5000 qubits, it can simulate large-sized color images. Considering the large size of the output probability histogram, this paper first simulated an edge detection algorithm for a color image with intensity values ranging from 0 to 7 and a size of 4×4. As shown in Fig. 14, four qubits are needed to represent position information, two qubits are needed to represent color channel information, and 27 qubits are required to encode the intensity values of the image and its neighborhood. An additional 20 auxiliary qubits are needed to ensure the success of the quantum adder and other modules, resulting in a total of 53 qubits needed. Therefore, the IBM Q backend selected for this chapter is "simulator_extended_stabilizer", which provides 63 qubits. The designed quantum circuit is transmitted to the quantum simulation backend, and the measurement count is set to 256 to obtain all the information about intensity $|med\rangle$, color channel λ, and position $|YX\rangle$. The program runs

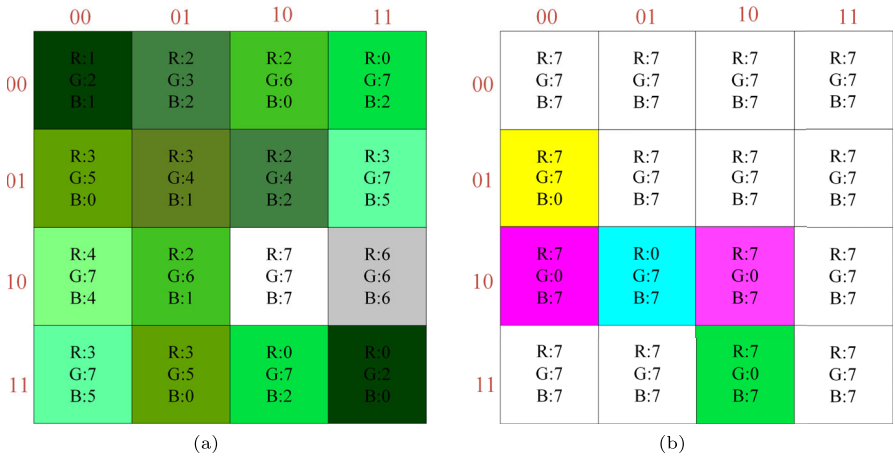

Fig. 15 **a** A 4 × 4 color image; **b** The result of measuring the quantum color image edge detection algorithm

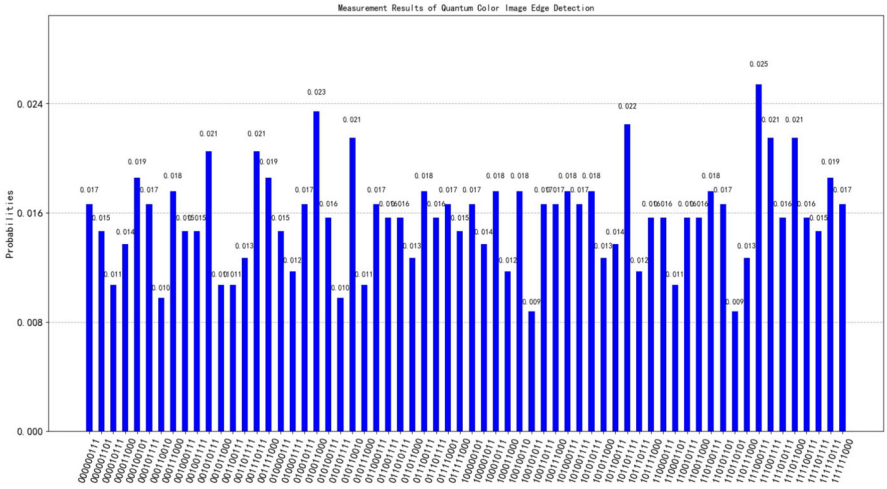

Fig. 16 The probability histogram of a 4 × 4 color image after edge detection

for a total time of 188.38 s. Figure 15a shows the original image, Fig. 15b shows the filtered image, and Fig. 16 shows the probability histogram of the edge detection for a 4 × 4 image color image.

The strings in the x-axis of Fig. 16 represent the quantum state output of the quantum measurement. For example, the first string '000000111' indicates that the first four qubits represent the position information of the color image from right to left, the fifth and sixth qubits represent the color channel information, and the last three qubits represent the intensity information. The y-axis represents the probability of the quantum state under quantum measurement. Although the verification confirms that the designed circuit is correct, the image obtained in the figure does not reflect the edge detection result. Therefore, in the following, three standard test color images, such as

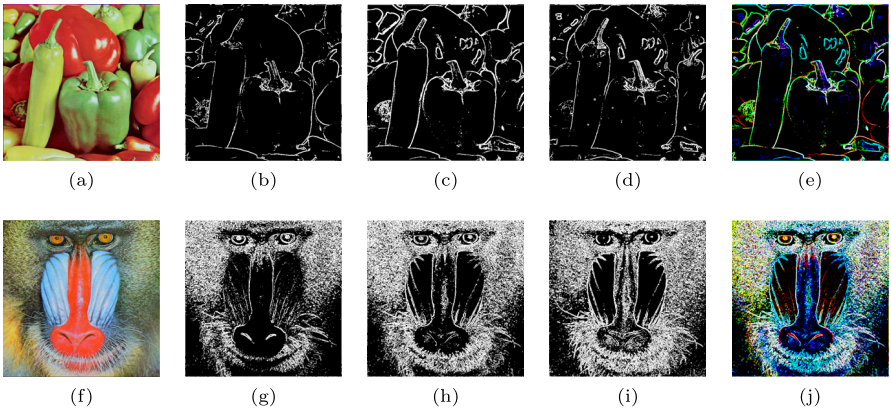

Fig. 17 **a**, **f** the original image; **b**, **g** edge detection results of the "R" channel; **c**, **h** Results after edge detection of the "G" channel. **d**, **i** edge detection results of the "B" channel; **e**, **j** The result of integrated edge detection

Peppers and Baboon, with a size of 512 × 512, are selected as the input of the color image edge detection circuit. The quantum backend "simulator_stabilizer" is chosen for this experiment, and each color image is measured 3.2 million times. However, the maximum number of measurements on IBM Q is 20,000 times. Therefore, the entire circuit is repeated 16 times to obtain all the information and restore the classical filtered image information. The final result of the whole circuit is 1,048,576 strings, so the probability histogram cannot be displayed. Due to the large size of the image and the long queue time of the IBM Q backend, it took 3.5 h to complete the edge detection of the image. As shown in Fig. 17, it can be seen that the edge detection results of the classical color image are the same as those of the quantum edge detection algorithm in this paper, and the algorithm complexity $O(q)$ is much lower than that of the classical color image edge detection algorithm $O(2^{2n})$.

5 Conclusion

This paper proposes a quantum color image edge detection algorithm based on the OCQR representation pattern and simulates it on the IBM Q platform. The specific work is as follows: first, various modules that make up the overall circuit, such as quantum adders, quantum subtractors, quantum maximum value calculation modules, and quantum threshold operation modules, are optimized using the reset gate. Based on these basic functional modules, a new edge detection algorithm based on an improved Sobel operator is designed. Through analysis, compared with the existing related work, it has lower circuit complexity and uses fewer qubits. The circuit complexity is reduced from $O(n^2 + q^3)$ to $O(q)$, and it can also process quantum color images. Therefore, the proposed quantum circuit helps simulate the proposed algorithm on the IBM Q simulator, and the experiment shows that the algorithm can effectively detect details in quantum color images.

The quantum color image edge detection algorithm proposed in this paper can be used for quantum machine learning to process large amounts of image data. Further practical applications of quantum image processing still need to be explored; therefore, the ideas discussed in this paper will provide effective solutions for many problems in related fields.

Acknowledgements The authors would like to acknowledge the financial support of the China University Industry-University-Research Innovation Fund Project (2021BCA02004), the National Natural Science Foundations of China (62222601, 61801061, 62176033, 62221005, 61936001), the Natural Science Foundation of Chongqing (cstc2019jcyj-msxmX0124), the China Scholarship Council's Young Key Teachers Overseas Training Program (202107845003) and the key cooperation project of Chongqing Municipal Education Commission (HZ2021008). The first author would also like to acknowledge the assistance she received from the China Scholarship Council and the University of Otago during her visit to New Zealand.

Author Contributions Suzhen Yuan and Xianli Li wrote the main manuscript text. Shuyin Xia, Xianrong Qing and Jermiah D. Deng revised the main manuscript. All authors reviewed the manuscript.

Data availability No datasets were generated or analyzed during the current study.

Declarations

Competing interests The authors declare no competing interests.

References

1. Venegas-Andraca, S.E., Bose, S.: Quantum computation and image processing: new trends in artificial intelligence. In: IJCAI, p. 1563 (2003)
2. Le, P.Q., Dong, F., Hirota, K.: A flexible representation of quantum images for polynomial preparation, image compression, and processing operations. Quantum Inf. Process. **10**(1), 63–84 (2011)
3. Zhang, Y., Lu, K., Gao, Y., Wang, M.: Neqr: a novel enhanced quantum representation of digital images. Quantum Inf. Process. **12**(8), 2833–2860 (2013)
4. Jiang, N., Wang, J., Mu, Y.: Quantum image scaling up based on nearest-neighbor interpolation with integer scaling ratio. Quantum Inf. Process. **14**(11), 4001–4026 (2015)
5. Sang, J., Wang, S., Li, Q.: A novel quantum representation of color digital images. Quantum Inf. Process. **16**(2), 1–14 (2017)
6. Liu, K., Zhang, Y., Lu, K., Wang, X., Wang, X.: An optimized quantum representation for color digital images. Int. J. Theor. Phys. **57**(10), 2938–2948 (2018)
7. Yuan, S., Wen, C., Hang, B., Gong, Y.: The dual-threshold quantum image segmentation algorithm and its simulation. Quantum Inf. Process. **19**(12), 1–21 (2020)
8. Li, P., Shi, T., Zhao, Y., Lu, A.: Design of threshold segmentation method for quantum image. Int. J. Theor. Phys. **59**(2), 514–538 (2020)
9. Yuan, S., Zhao, W., Gao, S., Xia, S.: An adaptive threshold-based quantum image segmentation algorithm and its simulation. Quantum Inf. Process. **21**(10), 359 (2022)
10. Jiang, S., Zhou, R.G., Hu, W., Li, Y.: Improved quantum image median filtering in the spatial domain. Int. J. Theor. Phys. **58**(7), 2115–2133 (2019)
11. Xia, H., Xiao, Y., Song, S., Li, H.: Quantum circuit design of approximate median filtering with noise tolerance threshold. Quantum Inf. Process. **19**, 1–23 (2020)
12. Ali, A.E., Abdel-Galil, H., Mohamed, S.: Quantum image mid-point filter. Quantum Inf. Process. **19**(8), 1–23 (2020)
13. Yuan, S., Qing, X., Hang, B.: Quantum color image median filtering in the spatial domain: theory and experiment. Quantum Inf. Process. **21**(9), 321 (2022)
14. Jiang, N., Wang, L.: Analysis and improvement of the quantum Arnold image scrambling. Quantum Inf. Process. **13**(7), 1545–1551 (2014)

15. Zhou, R.G., Sun, Y.J.: Quantum image Gray-code and bit-plane scrambling. Quantum Inf. Process. **14**, 1717–1734 (2015)
16. Le, P.Q., Iliyasu, A.M., Dong, F., Hirota, K.: Strategies for designing geometric transformations on quantum images. Theoret. Comput. Sci. **412**(15), 1406–1418 (2011)
17. Fan, P., Zhou, R.G., Jing, N., Li, H.S.: Geometric transformations of multidimensional color images based on nass. Inf. Sci. **340**, 191–208 (2016)
18. Zhou, R.G., Tan, C., Ian, H.: Global and local translation designs of quantum image based on frqi. Int. J. Theor. Phys. **56**(4), 1382–1398 (2017)
19. Zhou, N., Tong, L., Zou, W.: Multi-image encryption scheme with quaternion discrete fractional Tchebyshev moment transform and cross-coupling operation. Signal Process. **211**, 109107 (2023)
20. Zhou, N., Hu, L.,Huang, Z., Wang, M., Luo, G.: Novel multiple color images encryption and decryption scheme based on a bit-level extension algorithm. Expert Syst. Appl. **238** (2024)
21. Zhang, Y., Lu, K., Gao, Y.: QSobel: a novel quantum image edge extraction algorithm. Sci. China Inf. Sci. **58**, 1–13 (2015)
22. Abdel-Khalek, S., Abdel-Azim, G.: New approach to image edge detection based on quantum entropy. J. Russ. Laser Res. **37**, 141–154 (2016)
23. Yao, X.W., Wang, H., Liao, Z., Chen, M.C.: Quantum image processing and its application to edge detection: theory and experiment. Phys. Rev. X **7**(3), 031041 (2017)
24. Fan, P., Zhou, R.G., Hu, W.: Quantum image edge extraction based on classical Sobel operator for NEQR. Quantum Inf. Process. **18**(1), 24 (2019)
25. Fan, P., Zhou, R.G., Hu, W.W.: Quantum image edge extraction based on Laplacian operator and zero-cross method. Quantum Inf. Process. **18**, 1–23 (2019)
26. Zhou, R.G., Liu, D.: Q: Quantum image edge extraction based on improved sobel operator. Int. J. Theor. Phys. **58**, 2969–2985 (2019)
27. Chetia, R., Boruah, S.: Quantum image edge detection using improved Sobel mask based on NEQR. Quantum Inf. Process. **20**, 1–25 (2021)
28. Xu, P., He, Z., Qiu, T.: Quantum image processing algorithm using edge extraction based on Kirsch operator. Opt. Express **28**(9), 12508–12517 (2020)
29. Li, P., Shi, T., Lu, A.: Quantum implementation of classical Marr? Hildreth edge detection. Quantum Inf. Process. **19**, 1–26 (2020)
30. Ma, Y., Ma, H., Chu, P.: Demonstration of quantum image edge extration enhancement through improved Sobel operator. IEEE Access **8**, 210277–210285 (2020)
31. Liu, W., Wang, L.: Quantum image edge detection based on eight-direction Sobel operator for NEQR. Quantum Inf. Process. **21**(5), 190 (2022)
32. Fan, P., Xiao, K.: Quantum image edge extraction based on difference of Gaussian operator. Quantum Inf. Process. **22**(1), 46 (2023)
33. Chetia, R., Sahu, P.P.: Quantum image edge extraction algorithm for noisy image. IETE J. Res. **70**(5), 5348–5363 (2024)
34. Yan, F., Venegas-Andraca, S.E.: Lessons from twenty years of quantum image processing. ACM Trans. Quantum Comput. **6**(1), 1–29 (2025)
35. Yan, F., Li, N., Hirota, K.: QHSL: a quantum hue, saturation, and lightness color model. Inf. Sci. **577**, 196–213 (2021)
36. Yuan, S., Gao, S., Wen, C.: A novel fault-tolerant quantum divider and its simulation. Quantum Inf. Process. **21**(5), 182 (2022)
37. Xia, H., Li, H., Zhang, H., Liang, Y., Xin, J.: Novel multi-bit quantum comparators and their application in image binarization. Quantum Inf. Process. **18**(7), 1–17 (2019)

Publisher's Note Springer Nature remains neutral with regard to jurisdictional claims in published maps and institutional affiliations.

Springer Nature or its licensor (e.g. a society or other partner) holds exclusive rights to this article under a publishing agreement with the author(s) or other rightsholder(s); author self-archiving of the accepted manuscript version of this article is solely governed by the terms of such publishing agreement and applicable law.

Authors and Affiliations

Suzhen Yuan[1,2,3] · Xianli Li[1] · Shuyin Xia[3,4] · Xianrong Qing[1] · Jermiah D. Deng[2]

✉ Suzhen Yuan
yuansuzhen@cqupt.edu.cn

Xianli Li
2974639819@qq.com

Shuyin Xia
xiasy@cqupt.edu.cn

Xianrong Qing
826420919@qq.com

Jermiah D. Deng
jeremiah.deng@otago.ac.nz

1 School of Electronic Science and Engineering, Chongqing University of Posts and Telecommunications, Chongqing 400065, China

2 School of Computing, University of Otago, Dunedin 9054, New Zealand

3 School of Artificial Intelligence, Chongqing University of Posts and Telecommunications, Chongqing 400065, China

4 Chongqing Key Laboratory of Computational Intelligence, Key Laboratory of Big Data Intelligent Computing, Key Laboratory of Cyberspace Big Data Intelligent Security, Ministry of Education, Chongqing University of Posts and Telecommunications, Chongqing 400065, China